Contents

Correct use **74**
Safety precautions 74
Installation 74
Electrical connection 75

System description **77**
„Teach-In“ actuator function 77
System status table 78
Inspection and maintenance 78
Function test (self-test) 79
Disclaimer of liability 79
Typical operating range 79

Technical data **80**
Connection and block diagram 80
Evaluation unit T 4000-1RBA 01 81
Sensors T 4000-DNA... 83
Actuator T 4000-1KBA 85

Correct use

The safety sensor **T 4000** is a safety device for monitoring moving safety guards so that:

- potentially hazardous work on the machine can be performed only if the safety guard is closed.
- a Stop command is triggered if the safety guard is opened with the machine running.

A risk assessment in accordance with the following standards must be conducted before using safety sensors:

- EN 954-1, Safety-Related Components of Controls, Annex C
- EN 1050, Machine Safety, Risk Assessment

Use as intended includes compliance with the relevant requirements for installation and operation, in particular

- EN 954-1, Safety-Related Components of Controls
- EN 1088, Interlocking Devices in Conjunction with Moving Safety Guards
- EN 60 204-1, Electrical Equipment of Machines
- EN 60 947-5-3, Requirements for Proximity Devices with Defined Behaviour under Error Conditions

Safety precautions

The safety sensor **T 4000** complies with the following safety requirements
- Control category 3 to EN 954-1.
- Proximity switch with self-monitoring, type PDF-M in accordance with EN 60-947-5-3.
- The circuit in the evaluation unit is configured using redundancy design techniques with self-monitoring. As a result, the safety guard remains active even if a component fails.
- When the safety guard is opened or closed, a check is conducted in order to establish whether the relays of the safety guard are opening and closing correctly.

Safety sensors perform personnel safety functions. Incorrect installation or tampering may lead to serious injury.

Installation

⚠ Only authorised specialists may perform installation work.

- Actuator and sensor must be easily accessible for inspection and exchange.

- The switching operation may only be triggered by the actuator specifically designed for this purpose.

- Actuator and sensor must be mounted in a manner such that
  - the distance between the end faces is equal to, or less than, the minimum switch-on distance 0.8 x S_{ao} when the safety guard is closed (see Technical data);
  - they are not used as a mechanical stop;
    Note: Attach an additional stop for the moving part of the safety guard;
  - with flush installation, the switching distance will change depending on the installation depth and the material of the safety guard.
  - they are attached flush with the safety guard, e.g. by using the enclosed safety screws.

- The evaluation unit must be installed in a switch cabinet with an enclosure of at least IP 54. A latching element on the rear side of the device is used for mounting on a standard rail.

- If several evaluation units are mounted next to each other in a switch cabinet where no air circulation (e.g. fan) is provided, there must be a gap of 10 mm between the evaluation units.
  The clearance enables heat to be dissipated from the evaluation units.

8 009 704/N605/24-07-03 • © SICK AG • Industrial Safety Systems • Germany • All rights reserved

Electrical connection

⚠ Electrical connection work may only be carried out by authorised specialists trained in EMC regulations. The electrical installation is only allowed to be performed with the electrical power supply switched off.

- Safety sensors may not be bypassed (contacts jumpered), turned away, removed or rendered inoperative in any other manner.
- All electrical connections must be isolated from the mains either by an isolating transformer (IEC 742) or using a comparable isolation method.
- All output contacts in the case of capacitive and inductive loads must feature an adequate suppressor circuit.
- Provide external contact fusing (fuse 6.3 A, quick acting) for relay outputs.

⚠ To ensure that safety is maintained, both output signal switching devices (relay outputs) 13/14 **and** 23/24 must be evaluated.

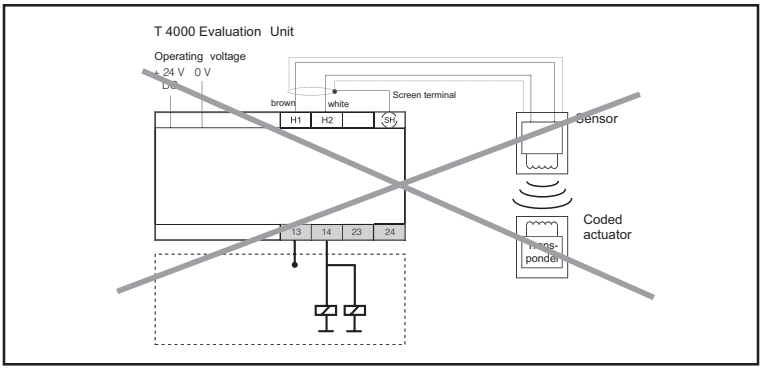

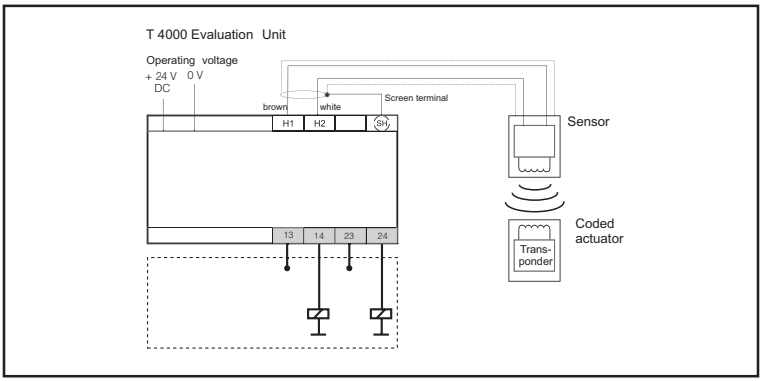

- If a common voltage supply is used, all of the inductive and capacitive loads (e.g. contactors) connected to the voltage supply must be connected to suitable suppressors.

⚠ The door signal output OUT must not be used as a safety output.

- It is not permitted to increase the length of the sensor connecting cable.

- The screen of the sensor cable (3 cm max. to be stripped) must be connected to the earth of the evaluation unit.

- The signal outputs ERR and OUT and the connection terminals for the read head H1/H2 are not short-circuit-proof.

- Should the device not function after the operating voltage has been connected (e.g. green STATE-LED does not light); please return the unit unopened to the manufacturer.

- Only copper with a temperature resistance of ≥ 75 °C may be used for the wiring.

- The screws for the connecting terminal must be tightened to a tightening torque of 0.6-0.8 Nm.

- For use in accordance with c UL us requirements, a power supply rated as suitable "for use in class 2 circuits" must be used.
  No currents ≥ 8A are permitted!

Note: The plug-in, coded terminals on the evaluation unit allow the preparation of the line terminals for use, thus permitting simple and fast final installation.
They also provide maximum safety during servicing.

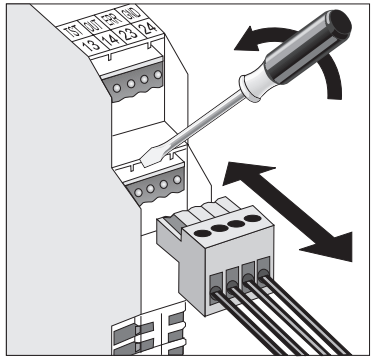

LED indicators

STATE	LED green	Normal operation
	blinking	Teach-in operation (See system status table for other signalling functions)
OUT	LED yellow	Valid actuator detector
ERROR	LED red	- Test input activated - Internal circuitry error - Invalid Teach-In operation (See system status table)

In the event of operating errors (ERROR), the evaluation unit can be reset to operating state by interrupting the supply voltage for approx. 10 seconds.

8 009 704/N605/24-07-03 • © SICK AG • Industrial Safety Systems • Germany • All rights reserved

System description

The safety sensor **T 4000** consists of three components:

- Coded actuator
- Sensor
- Evaluation unit

Each actuator supplied features a unique electronic code that is unique to the system used. The actuator code cannot be reprogrammed.

The sensor is mounted on the stationary part of the safety guard and is connected to the evaluation unit via a two-core, screened cable.
The actuator mounted on the safety guard is moved towards the sensor when the door is closed. When the activation distance is reached, power is supplied to the actuator via the inductive sensor and the data can be transferred.
The read-in bit pattern is compared with the code stored in the evaluation unit. If the two sets of data match, the safety outputs (relay output) are released and the door signal output OUT (semiconductor output) is set to HIGH.
Owing to dynamic scanning by the actuator and the diversity of the safety electronics in conjunction with two monitored safety outputs, the evaluation unit enters the safe state when any detectable error occurs.
When the safety guard is opened, the safety outputs disconnect the safety circuit and the door signal output (OUT) is switched to LOW. The status of the normally open contacts is monitored internally via positive-action normally closed contacts.
If an internal error occurs in the evaluation unit, the safety circuit is disconnected, the diagnostic output (ERROR) is set to HIGH and the red ERROR LED lights up.

Note: The dwell time of an actuator inside and outside the operating range must be at least 0.5 seconds, otherwise the evaluation unit could enter the error state so that the red ERROR LED lights up. Disconnecting the voltage supply returns the evaluation unit to the operating state.

„Teach-In“ actuator function

The actuator must be assigned to the evaluation unit with the Teach-In function before the system forms a functional unit.
During the Teach-In operation, the safety outputs and the door signal output are set to LOW, i.e. the system is in the safe state.

● Teach-In function for first actuator (condition as delivered):
1. Apply the operating voltage to the evaluation unit
   - Fast blinking (approx. 4 Hz) of the green LED
2. Move the actuator towards the sensor (note distance < S_{ao})
   - Teach-In operation commences; slow blinking (approx. 1 Hz) of the green LED
3. Teach-In operation complete (after 60 seconds)
   - Green LED goes out
4. The operating voltage applied to the evaluation unit must then be disconnected for a minimum of 10 seconds to activate the actuator code taught in the evaluation unit.

● Teach-In function for a new actuator:
1. Apply the operating voltage to the evaluation unit
2. Move the new actuator towards the sensor (note distance < S_{ao})
   - Teach-In operation commences; green LED blinks (approx. 1 Hz)
3. Teach-In operation complete (after 60 seconds)
   - Green LED goes out, new code is saved and old code is deactivated.
4. The operating voltage on the evaluation unit must then be disconnected for a minimum of 10 seconds to activate the actuator code taught in the evaluation unit.

Note:
- It is not possible to teach the same actuator on the same evaluation unit more than once.
- The number of valid Teach-In operations on one evaluation unit is limited to a maximum of 8.
- The evaluation unit can be operated only with the last actuator taught.
- A Teach-In operation is invalid if:
  - the Teach-In operation is aborted before the green LED go out
  - The supply voltage has been disconnected during the Teach-In operation

Important:
The system automatically reverts to Teach-In mode even after the 8th Teach-In operation or if an “old” actuator is moved against the read head. In both cases, a Teach-In operation lasting 60 seconds is initiated, but the last actuator code remains active in memory (see Status table); no new code is taught.

System status table

			PLC			LED indicator				Status
			Input	Output						
	Actuator/ Door position	Relays KA, KB (Safety citcuit)	TST	OUT (alarm signal)	ERR	STATE (green)	Number of blink pulses	OUT (yellow)	ERR (red)	
Normal operation	**clos.**	**on**	N	**1**	0	1		**1**	0	**Normal operation, door closed**
	open	**off**	N	**0**	0	0		**0**	0	**Normal operation, door open**
Commissioning	open	off	N	0	0	**blinks constantly at 4 Hz**		0	0	Initial commissioning on delivery Ready for first Teach-In operation
	clos.	off	N	0	0	**blinks 60 sec at approx. 1 Hz**		0	0	**Teach-In operation**
	clos.	off	N	0	0	0		0	0	**Positive acknowledgment for successful Teach-In operation.** The unit must be switched back on again for normal operation
Status display	x	off	x	0	0	**One-Off blink sequence after power-off**	**3**	0	0	Indication after 1st to 5th Teach-In operation
	x	off	x	0	0		**2**	0	0	Indication of the number of Teach-In operations still allowed after the 6th Teach-In operation
	x	off	x	0	0		**1**	0	0	Indication of the number of Teach-In operations still allowed after the 7th Teach-In operation
	x	off	x	0	0		**0**	0	0	Device is now unable to perform a further Teach-In operation
Error indication	x	off	N	0	1	0		0	**1**	Device-internal component failure or
	x	off	N	0	1	0		0	**1**	Actuator in response range **less than 0,5 sec**
Operating error	**clos.**	off	N	0	1	**Brief blink sequences repeated after 1 sec.**	**1**	0	**1**	Illegal **9th Teach-In-operation**
	clos.	off	N	0	1		**2**	0	**1**	Illegal Teach-In operation of an **old actuator**
	clos.	off	N	0	1		**3**	0	**1**	Negative acknowledgment for Teach-In operation. Actuator was held in front of read head for less than 60 sec.
Test mode	open	off	**1**	0	**1**	1		0	1	
	clos.	off	**1**	0	**1**	1		0	1	**External device test for „OPEN“ and function ERR output with door closed**

N = 0 Volt or not connected
0 = 0 Volt
1 = 24 Volt
x = 0 or 24 Volt
resp.door open or closed

1 = on
0 = offl

Note:

- The evaluation unit can be operated only with the last actuator taught.

Inspection and maintenance

Regular inspections must be conducted, as follows, in order to ensure correct long term operation:

- Firm, safe attachment of the actuator and sensor (use the enclosed safety screws)
- Tightness of the cable entry point on the sensor to prevent moisture ingress
- Loose line and lead connections on the evaluation unit
- Check of the switch-off distance

8 009 704/N605/24-07-03 • © SICK AG • Industrial Safety Systems • Germany • All rights reserved

Function test (self-test)

On electromechanical safety switches or magnetic sensors, the test function can be conducted by cyclically opening the safety guard.

As of control category 2, a function test of the entire safety system must be conducted in accordance with EN 60204-1 : 1997 (Chapter 9.4.2.4) on start-up or at required intervals.

The internal functioning of the T 4000 safety sensor does not need to be checked because the device monitors itself in real time. The fusing of an output contact (relay output) will be detected at the very latest when the safety guard is next opened. A cross fault along the output line is not detected by the device. Furthermore, the entire safety circuit can be tested without opening the safety guard. This is done by applying 24 V DC to the test input to simulate opening of the safety guard.

The safety outputs are disabled so that the entire safety circuit can be tested. As a monitoring function, the diagnostic output ERR is also set to HIGH by the evaluation unit.
When the test input is reset, the diagnostic output ERR is set back to LOW by the evaluation unit, the red LED goes out and the safety outputs are switched on again.
This allows the safety system to test itself without the safety guard having to be opened.

Disclaimer of liability

We do not accept liability in the following cases:

- use as not intended
- non-compliance with safety information
- electrical attachment and connection by unauthorised personnel
- tampering

Typical operating range (with cable length l = 0 to 25 m) [7]

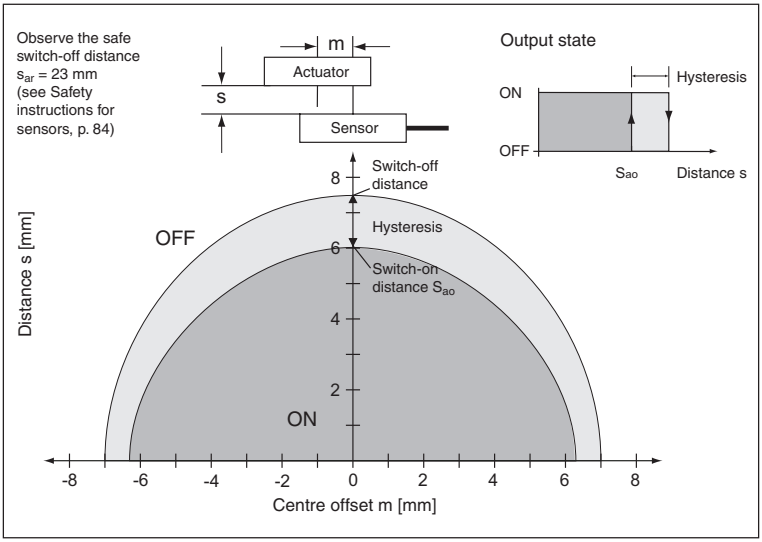

[7] For min./max. values, see Technical data

Connection and block diagram, example connection

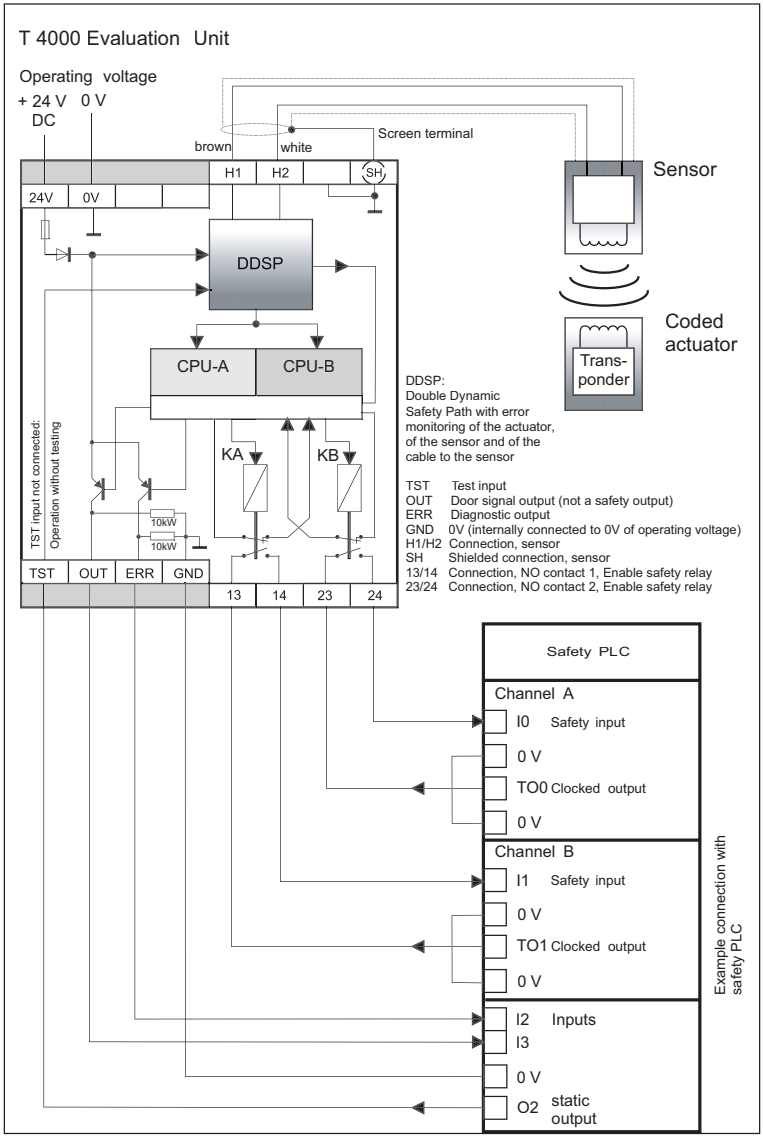

8 009 704/N605/24-07-03 • © SICK AG • Industrial Safety Systems • Germany • All rights reserved

Evaluation unit T 4000-1RBA 01

Dimension drawing

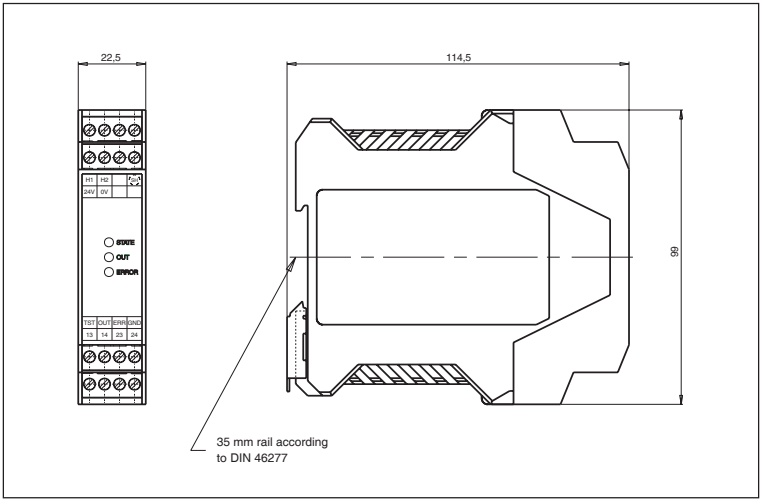

Switching characteristics

2 safety outputs (relay outputs)
1 door signal output (semiconductor output, no safety output)

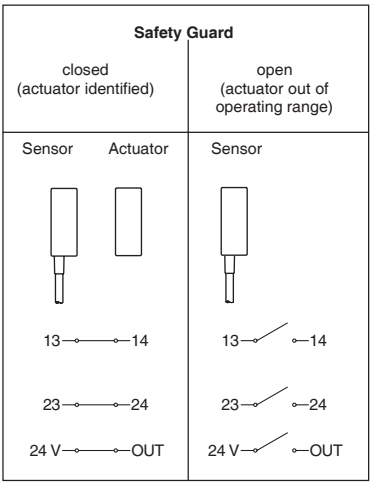

Technical data

Parameter	Value			Unit
	min.	typical	max.	
Housing material	Plastic PA6.6			
Dimensions	114.5 x 99 x 22.5			mm
Weight	0.2			kg
Ambient temperature at U_B = 24 V DC	0	-	+55	°C
Storage temperature	-25	-	+70	°C
Enclosure	IP20			
Protection class	Protection class III, degree of contamination 2			
Material class	II			
Mounting	35 mm rail in accordance with DIN 46277			
Number of sensors	1 sensor per evaluation unit			
Type of connection	plug-in screw terminals / coded			
Connection terminals	0.14	-	2.5	mm²
Operating voltage U_B (stabilised, residual ripple < 5 %)	21	24	27	V DC
Current consumption (with activated relay)	150			mA
Safety outputs	2 safety relays, each with one NO contact			
Switching current (relay outputs) [1] - Switching voltage 0,1 ... 60 V - Switching voltage 10 ... 24 V	 1 1	 - -	 300 4000	 mA mA
External fusing (safety circuit)	6,3 A quick acting			
Utilisation category to EN 60947-5-2	AC-12 300mA 60V 50Hz / DC-12 300mA 60V AC-140 2A 30V 50Hz / DC-13 4A 30V			
Control category to EN 954	3			
Classification to IEC/EN 60 947-5-3	PDF-M			
Rated insulation voltage U_i	-	-	63	V
Rated impulse withstand voltage U_{imp}	-	-	1,5	kV
Resistance to vibration	in accordance with EN 60 947-5-2			
Meachanical switching operations (relays)	10×10^6			
Operating delay as of state change	-	-	180	ms
Risk period [2]	-	-	180	ms
Start-up delay time [3]			3	s
Dwell time	0,5	-	-	s
Signal outputs (diagnostic ERR, door signal output OUT, semiconductor output, p-switching) [4] - Output voltage - Load rating	 0,8 x U_B -	 - -	 U_B 20	 V DC mA
Testinput LOW HIGH	0 15	- -	2 U_B	V DC V DC
EMV protection requirements	to IEC 60947-5-3			
LED indicators	STATE LED green: Normal mode blinking: Teach-In operation OUT LED yellow: Actuator detected ERROR LED red: - Test input activated - Internal circuitry error - Invalid Teach-In operation			

[1] If a switching current > 300 mA is switched via the relay outputs, low current (≤ 10 mA) can no longer be reliably switched owing to erosion of the gold contacts.

[2] The risk period is the maximum switch-off delay following the failure of an internal component. Fusing of one of the relay outputs is not detected until the safety guard is opened.

[3] When the operating voltage is switched on, the relay outputs are switched off and the door signal contact set to LOW potential during the start-up delay.

[4] non-short-circuit-proofed

8 009 704/N605/24-07-03 • © SICK AG • Industrial Safety Systems • Germany • All rights reserved

Sensors T 4000-DNA...

Sensor T 4000-DNA..P (with fixed cable)
Dimension drawing

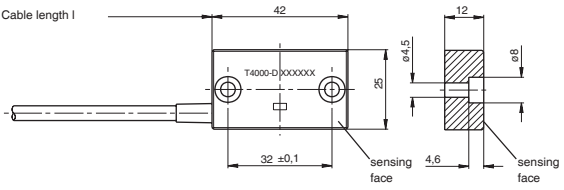

Connection diagram

Sensor with connecting cable

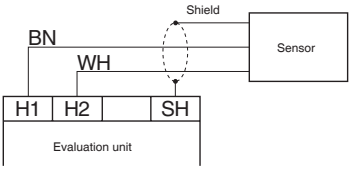

Sensor T 4000-DNAC with plug connector M8 (with snap-in/screw connection)
Dimension drawing

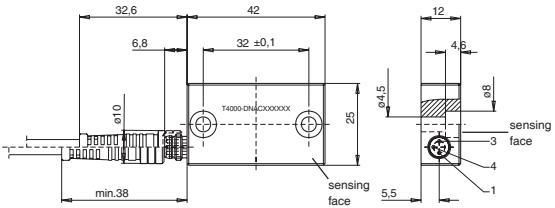

Connection diagram

Sensor with plug connector

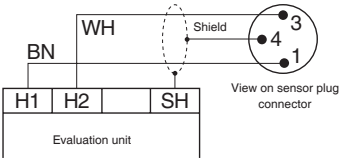

Technical data

Parameter	Value			Unit
	min.	typical	max.	
Housing material	Fortron, glass-reinforced thermoplastic material, fully encapsulated			
Dimensions	42 x 25 x 12			mm
Mass (including 10 m cable)	0.3			kg
Ambient temperature	-25	-	+70	°C
Enclosure	IP67			
Installation position	any			
Mode of operation	inductive			
Dynamic data transfer to evaluation unit	2			kbit/s
Dwell time [1]	0.5	-	-	s
Operating range in the case of centre offset m = 0 [2]				
Line length l = 0 to 25 m				
- Switch-on distanc S_{ao}	5	6	-	
- Differential hysteresis	0.5	1.5	-	
- Safe switch-off distance S_{ar}	-	-	23	mm
Line length l ≥ 25 to 50 m				
- Switch-on distanc S_{ao}	4	4.8	-	
- Differential hysteresis	0.4	1.2	-	
- Safe switch-off distance S_{ar}	-	-	23	
Power supply	via evaluation unit			
Connection sensor T 4000-DNA..P	permanently sealed connection cable, with wire end ferrules			
Line length sensor T 4000-DNA..P			15	m
Connection sensor T 4000-DNAC	Plug connector M8 (with snap-in / screw connection), 3-pole			
Line length T 4000-DNAC	-	-	50	m

[1] The dwell time is the time during which the actuator must be inside or outside the operating range.
[2] These values only apply for the protruding and flush installation of the sensor and the actuator in aluminium.

Notes on installation

- The sensor connecting cable must not be increased in length.
  Inline connection not permitted.

- Actuator and sensor must be attached so that:
  - The distance between the sensing faces is less than or equal to the switch-on distance 0,8 x S_{ao} (see Technical data) with the safety guard closed.
  - They are not used as a mechanical stop.
  - They are positively connected to the safety guard; e.g. by using the enclosed safety screws.

Safety precautions

- With flush installation of the sensor and/or actuator, the switching distance will change depending on the installation depth and the material of the safety guard.

- The safety guard must be designed so that the distance S_{ar} (safe switch-off distance) does not allow for a gap that will increase the possibility of exposure to the hazard.
  Note: The relay outputs are safely deactivated, even in the case of an internal component failure, at the safe switch-off distance S_{ar} = 23 mm .

8 009 704/N605/24-07-03 • © SICK AG • Industrial Safety Systems • Germany • All rights reserved

Actuator T 4000-1KBA

Dimensions drawing

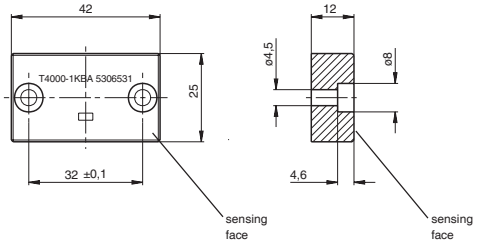

Technical data

Parameter	Value			Unit
	min.	typ.	max.	
Housing material	Fortron, glass-reinforced thermoplastic material, fully encapsulated			
Dimensions	42 x 25 x 12			mm
Mass	0,02			kg
Ambient temperature	-25	-	+70	°C
Enclosure	IP67			
Installation position	sensing face opposite sensor			
Dwell time [1]	0,5	-	-	s

[1] The dwell time is the period for which the actuator must remain inside or outside the operating range.